LAND RESOURCE MANAGEMENT
Land Evaluation by Land Experts
P.O. BOX 9251 , ASHEVILLE, NC 28815 || 828-900-8700 || WWW.LANDRM.COM

Secluded Hills Development

Merrills Ridge Rd

Asheville, NC, 28803

PIN# 9676010503 (Lot 13)

Client: Jerry Bush

Contact: Jerry Bush

Email: jerry@walnutcoverealty.com

Phone: (803) 422-8029

LRM Job #: 626625

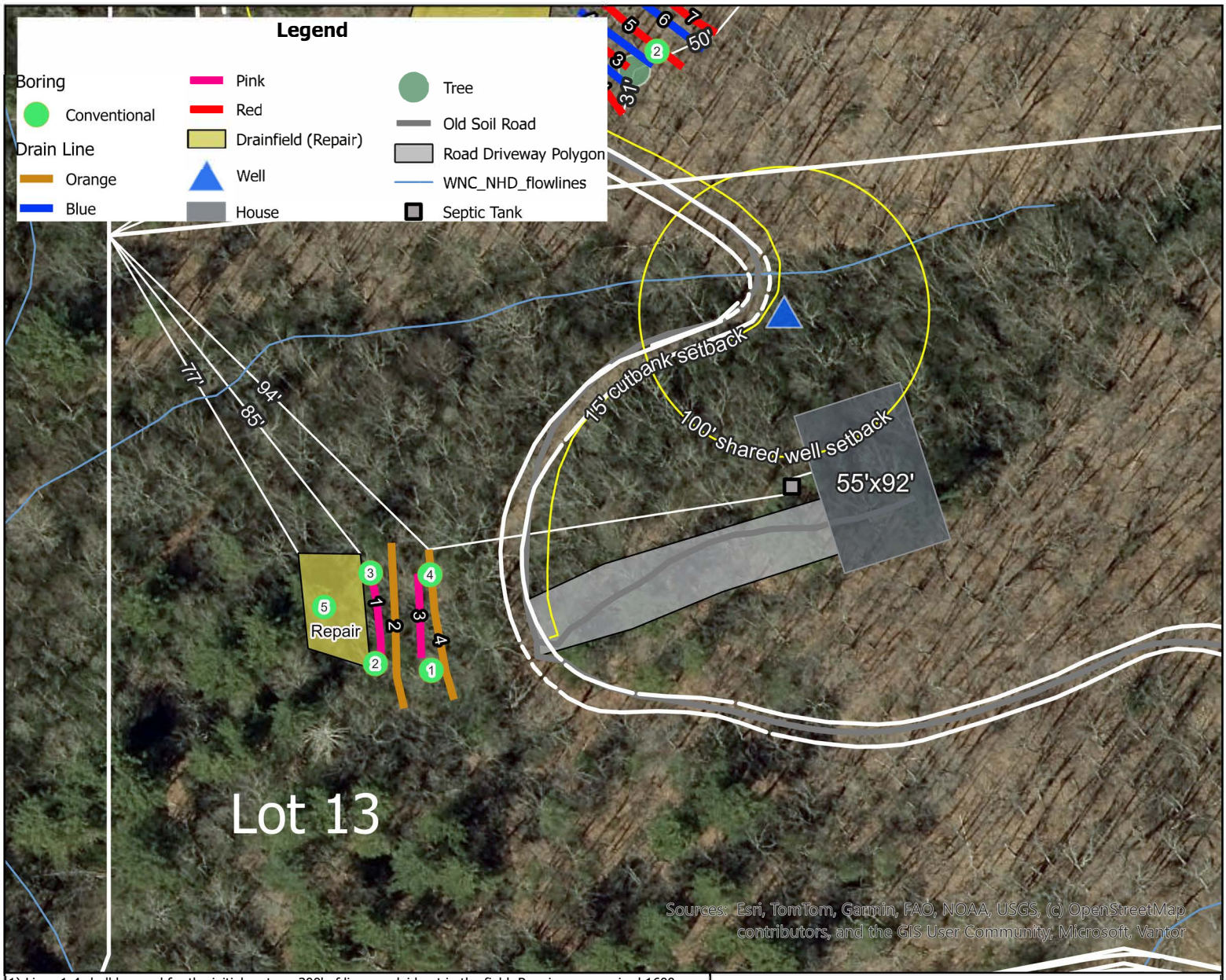

1) Lines 1-4 shall be used for the initial system. 300' of line was laid out in the field. Repair area required 1600 Sqft., 3618 Sqft. laid out in field.
2) A total of 300' are required for the initial system.
3) Septic shall be >10' from any property line, >15' from any cut >2', >5' from any building foundation, 50' from any springor surface water and single family well, and >100' from any shared well.
4) Per 15A NCAC 18E the minimum septic tank volume is 1000 gals. LRM recommends serial distribution. Supply lines/plumbing shall be 3-4"Sch40 PVC. Risers must meet the requirements of 15ANCAC 18E .1404 (d)
5) LRM's soil evaluation and recommendations have been made in accordance with North Carolina Department of Environmental, Health, and Natural Resources, Division of Environmental Health. On-site wastewater Section On-site Wastewater Management: Guidance Manual and 15A North Carolina Administrative Code 18E. Any grading or disturbance in the proposed drain field area renders this report null and void.
6) No house site was staked at time of LRM's evaluation. If proposed house site interferes with the proposed layout, or is within the 5' minimum setback, please contact LRM for a re-evaluation. House site MUST be staked for evaluation.
7) If gravity flow cannot be obtained, a pump tank will be required. Per 15A NCAC 18E the minimum pump tank volume is 1000 gallons. LRM recommends use of an approved 1000 gal. pump tank.
8) This AOWE submittal is pursuant to and meets the requirements of G.S.130A-336.2.

LRM is required to inspect the septic system installation and submit all necessary documentation to the county prior to the issuance of the Authorization to Operate (ATO) and the release of the Certificate of Occupancy (CO). These services, along with the associated fees, are detailed in LRM's contract for this permit. This requirement is tied to the parcel and permit. The scheduling and associated fees will be the responsibility of the owner constructing the residence and installing the septic system.

LRM requires the licensed septic system installer contact us via email at info@landrm.com or by phone at 828-900-8700 to schedule a pre-construction conference. This conference must be scheduled at least two weeks prior to the planned system installation.

PRIMARY:

System Kind: **25% Reduction (3' Chambers)**

LTAR: 0.40	4-Bedroom (480 GPD)
Trench Depth (in.): 18	Trench Width (in.): 36

LINES (Downslope to upslope / 9 ft. centers)

LINE	COLOR	FEET	CUM. FEET
1	Pink	60	60
2	Orange	90	150
3	Pink	60	210
4	Orange	90	300

REPAIR:

System Kind: **Aerobic Drip Irrigation**

LTAR: 0.30	4-Bedroom (480 GPD)
Trench Depth (in.): 6	Trench Width (in.): N/A

Note that the repair area system type is Aerobic Drip. A total area of 3061 ft2 is available for the repair area. Repair area requires a minimum of 1600 ft2.

Jerry Bush	Secluded Hills (Lot 13)

LRM
LAND RESOURCE MANAGEMENT, PLLC
P.O. BOX 9251
ASHEVILLE, N.C. 28815
Phone: (828) 900-8700
www.landrm.com

Drawn By: MNM	Scale: As Noted
Checked By: WBF	Date - 01/21/2026
Project Number: 626625	Revision

0 20 40 80 120 160 200 US Feet

Gate Code 1981
Bob Barnwell

LAND RESOURCE MANAGEMENT
Land Evaluation by Land Experts
P.O. BOX 9251 , ASHEVILLE, NC 28815 || 828-900-8700 || WWW.LANDRM.COM

North Carolina G.S. 130A - 336.2 Consent Form

I, Orchard Village Trust (owner/applicant) of 9999-12/13/16/17/18 (parcel ID) in Buncombe County, North Carolina understand that the Licensed Soil Scientist (LSS) Evaluation and Authorized On-site Wastewater Evaluator (AOWE) design attached to this application is to be used to produce design and construction features for permitting in accordance with G.S. 130A-336.2.

I, Orchard Village Trust, also relinquish Land Resource Management, PLLC (LRM) of all liability associated with the property identified above beyond the date of the sealed Licensed Soil Scientist (LSS) report. Any site alterations occurring after this date including, but not limited to, driveways, grading, drainage, basements, water supply, bedroom count, (etc.) are the responsibility of the owner and their contractor. LRM will be happy to consult on any modification, or changes upon request. A new dated sealed LSS report will be issued for all approved modifications.

Owner Signature

Orchard Village Trust, JPMorgan Chase Bank. N.A. as Trustee
By: Terrye L. Wheatley, Executive Director

***Note: Please provide a signed authorization document from the property owner if the applicant is not the current owner. ***

PROPERTY OWNER CONSENT FORM

Buncombe County Environmental Health
30 Valley Street
Asheville, NC 28801
Ph: (828)250-5016, Fax: (828)250-6161

I, Orchard Village Trust am the legal owner(s) of the property
(Owner(s) name, print)

located at 9999-12/13 16/17/18, identified as PIN (Parcel
(Address)

Identification Number) 9676-01-0503-00000, located in Buncombe County, North Carolina.
(PIN)

I do hereby authorize Land Resource Management, PLLC,
(Legal representative/company name, print)

to act as an agent on my behalf in applying for/signing/obtaining any of the documents described below:

- Application for Improvement Permit (IP) / Authorization to Construct (AC)
- Improvement Permit (IP) / Authorization to Construct (AC)
- Application for soil-site evaluation (new/repair)
- Application/permit for private drinking water well/well abandonment
- Application for Compliance Inspection

I agree to abide by all decisions and/or conditions between the legal representative acting on my behalf and Buncombe County Health and Human Services, Environmental Health Division. I also understand I may be contacted at 239-398-0816
(Phone number)

by the Buncombe County Environmental Health Services prior to a scheduled appointment with my agent.

Signature of Owner(s) 1/23/26 Date

Orchard Village Trust, JPMorgan Chase Bank. N.A. as Trustee
By: Terrye L. Wheatley Executive Director

***Applications for permits require the "signature of the owner or owner's legal representative" (15A NCAC 18A* .1937). If the owner does not sign the application himself/herself, they can submit any one of the following documents to designate their legal representative: Power of Attorney, Real Estate Contract, Estate executor, Bankruptcy trustee, Court ordered guardianship**

Revised 01/16

North Carolina Onsite Wastewater Contractor Inspector Certification Board
Authorized Onsite Wastewater Evaluator Permit Option for Non-Engineered Systems
Notice of Intent (NOI) to Construct

[✔] New [ ] Expansion [ ] Repair [ ] Relocation [ ] Relocation of Repair Area

Owner or Legal Representative Information:

Name: Orchard Village Trust c/o JPMorgan Chase

Mailing address: 1900 N. Akard St, Floor 6 City: Dallas State: ~~NC~~ TX Zip: 75201

Phone: Email:

Authorized Onsite Wastewater Evaluator Information:

Name: Walker Ferguson Certification #: 10001E

Mailing address: PO Box 9251 City: Asheville State: NC Zip: 28805

Phone: 828-900-8700 Email: walker@landrm.com

Site Location Information:

Site address: 9999 - 12/13/16/17/18 Lot 13

Tax parcel identification number or subdivision lot, block number of property 9676-01-0503-00000

County: Buncombe

System Information:

Wastewater System Type: 25% Reduction (3' Chambers)

Daily Design Flow: 480

Saprolite System: [ ] Yes [✔] No Subsurface Operator Required: [ ] Yes [✔] No

Water Supply Type: [ ] Private Well [✔] Public Water Supply [ ] Spring [ ] Other:

Facility Type:

[✔] Residential 4 # Bedrooms 8 Maximum # of Occupants

[ ] Business Type of Business and Basis for Flow:

[ ] Public Assembly Type of Public Assembly and Basis for Flow:

Required Attachments:

[✔] Plat or Site Plan

[✔] Evaluation of Soil and Site Features by Licensed Soil Scientist

Attest: On this the 23rd day of January, 2026 by signature below I hereby attest that the information required to be included with this NOI to Construct is accurate and complete to the best of my knowledge. Furthermore, I hereby attest that I have adhered to the laws and rules governing onsite wastewater systems in the state of North Carolina. This NOI shall expire on 23 day of January, 2031.

Signature of Authorized Onsite Wastewater Evaluator:

Signature of Owner or Legal Representative: Orchard Village Trust, JPMorgan Chase Bank, N.A. as Trustee by: Terryl L. Wheatley Executive Director

Disclosure: The owner may apply for a building permit for the project upon submitting a complete NOI to Construct and the fee required (if any) to the local health department. An onsite wastewater system authorized by an authorized onsite wastewater evaluator shall be transferable to a new owner with the consent of the authorized onsite wastewater evaluator.

Local Health Department Receipt Acknowledgement:

Signature of Local Health Department Representative: Date:

CERTIFICATE OF LIABILITY INSURANCE

DATE (MM/DD/YYYY): 10/30/2025

THIS CERTIFICATE IS ISSUED AS A MATTER OF INFORMATION ONLY AND CONFERS NO RIGHTS UPON THE CERTIFICATE HOLDER. THIS CERTIFICATE DOES NOT AFFIRMATIVELY OR NEGATIVELY AMEND, EXTEND OR ALTER THE COVERAGE AFFORDED BY THE POLICIES BELOW. THIS CERTIFICATE OF INSURANCE DOES NOT CONSTITUTE A CONTRACT BETWEEN THE ISSUING INSURER(S), AUTHORIZED REPRESENTATIVE OR PRODUCER, AND THE CERTIFICATE HOLDER.

IMPORTANT: If the certificate holder is an ADDITIONAL INSURED, the policy(ies) must have ADDITIONAL INSURED provisions or be endorsed. If SUBROGATION IS WAIVED, subject to the terms and conditions of the policy, certain policies may require an endorsement. A statement on this certificate does not confer rights to the certificate holder in lieu of such endorsement(s).

PRODUCER
LN Davis Insurance Agency
143 N. Main Street
P.O. Box 630
Waynesville NC 28786-0630

CONTACT NAME: Kristy Pope
PHONE (A/C, No, Ext): (828)452-2876 FAX (A/C, No): (828)456-5325
E-MAIL ADDRESS: kristy@lndavis.com

INSURER(S) AFFORDING COVERAGE	NAIC #
INSURER A : Ironshore Ins. Co.	25445
INSURER B : Auto Owners Insurance	18988
INSURER C : Cincinnati Indemnity Co.	23280
INSURER D :	
INSURER E :	
INSURER F :	

INSURED
LAND RESOURCE MANAGEMENT, PLLC
PO Box 9251
Asheville NC 28815-

COVERAGES **CERTIFICATE NUMBER:** 1 **REVISION NUMBER:** 0

THIS IS TO CERTIFY THAT THE POLICIES OF INSURANCE LISTED BELOW HAVE BEEN ISSUED TO THE INSURED NAMED ABOVE FOR THE POLICY PERIOD INDICATED. NOTWITHSTANDING ANY REQUIREMENT, TERM OR CONDITION OF ANY CONTRACT OR OTHER DOCUMENT WITH RESPECT TO WHICH THIS CERTIFICATE MAY BE ISSUED OR MAY PERTAIN, THE INSURANCE AFFORDED BY THE POLICIES DESCRIBED HEREIN IS SUBJECT TO ALL THE TERMS, EXCLUSIONS AND CONDITIONS OF SUCH POLICIES. LIMITS SHOWN MAY HAVE BEEN REDUCED BY PAID CLAIMS.

INSR LTR	TYPE OF INSURANCE	ADDL INSD	SUBR WVD	POLICY NUMBER	POLICY EFF (MM/DD/YYYY)	POLICY EXP (MM/DD/YYYY)	LIMITS	
A	X COMMERCIAL GENERAL LIABILITY CLAIMS-MADE X OCCUR X Pollution Liability GEN'L AGGREGATE LIMIT APPLIES PER: X POLICY PRO-JECT LOC OTHER:	X	X	IEPUW0031722301	11/01/2025	10/01/2026	EACH OCCURRENCE DAMAGE TO RENTED PREMISES (Ea occurrence) MED EXP (Any one person) PERSONAL & ADV INJURY GENERAL AGGREGATE PRODUCTS - COMP/OP AGG 	$ 1,000,000 $ 500,000 $ 25,000 $ 1,000,000 $ 2,000,000 $ 2,000,000 $
B	AUTOMOBILE LIABILITY ANY AUTO X OWNED AUTOS ONLY X HIRED AUTOS ONLY X SCHEDULED AUTOS X NON-OWNED AUTOS ONLY		X	5252434900	10/01/2025	10/01/2026	COMBINED SINGLE LIMIT (Ea accident) BODILY INJURY (Per person) BODILY INJURY (Per accident) PROPERTY DAMAGE (Per accident) Medical Payments	$ 1,000,000 $ $ $ $ 10,000
B	X UMBRELLA LIAB X OCCUR EXCESS LIAB CLAIMS-MADE DED X RETENTION $ 10,000			5252434900	10/01/2025	10/01/2026	EACH OCCURRENCE AGGREGATE 	$ 1,000,000 $ 1,000,000 $
C	WORKERS COMPENSATION AND EMPLOYERS' LIABILITY ANY PROPRIETOR/PARTNER/EXECUTIVE OFFICER/MEMBER EXCLUDED? Y / N N (Mandatory in NH) If yes, describe under DESCRIPTION OF OPERATIONS below	N / A		EWC 0277760	10/01/2025	10/01/2026	PER STATUTE X OTH-ER E.L. EACH ACCIDENT E.L. DISEASE - EA EMPLOYEE E.L. DISEASE - POLICY LIMIT	 $ 1,000,000 $ 1,000,000 $ 1,000,000
A	Professional Liability			IEPUW0031722301	11/01/2025	10/01/2026	Each Occurrence	$1,000,000

DESCRIPTION OF OPERATIONS / LOCATIONS / VEHICLES (ACORD 101, Additional Remarks Schedule, may be attached if more space is required)

Soil Scientist specializing in septic tank site consulting.

Certificate Holder is listed as Additional Insured as required by contract per policy form 55091 and includes Blanket Waiver of Subrogation.

Primary and Non-Contributory Liability applies per Form 20 01 04 03.

CERTIFICATE HOLDER

INSURED COPY

CANCELLATION AI 110833

SHOULD ANY OF THE ABOVE DESCRIBED POLICIES BE CANCELLED BEFORE THE EXPIRATION DATE THEREOF, NOTICE WILL BE DELIVERED IN ACCORDANCE WITH THE POLICY PROVISIONS.

AUTHORIZED REPRESENTATIVE Kristy L Pope

© 1988-2015 ACORD CORPORATION. All rights reserved.

INFILTRATOR®
septic tanks

CM-1060

Features & Benefits

- Strong compression molded polypropylene construction
- Lightweight plastic construction and inboard lifting lugs allow for easy delivery and handling
- Integral heavy-duty green lids that interconnect with EZsnap risers and pipe riser solutions
- Structurally reinforced access ports eliminate distortion during installation and pump-outs
- Reinforced structural ribbing and fiberglass bulkheads offer additional strength
- Can be installed with 6” to 48” (152 to 1,219 mm) of cover
- Can be pumped dry during pump-outs
- Suitable for use as a septic tank, pump tank, or rainwater (non-potable) tank
- No special water filling requirements are necessary
- The tank may be backfilled with suitable native soil. See installation instructions for guidance.

The Infiltrator CM-1060 is a lightweight, strong and durable septic tank. This watertight tank design is offered with Infiltrator’s line of custom-fit risers and heavy-duty lids. Infiltrator compression molded tanks provide a revolutionary improvement in thermoplastic septic tank design, offering exceptional long-term strength and watertightness.

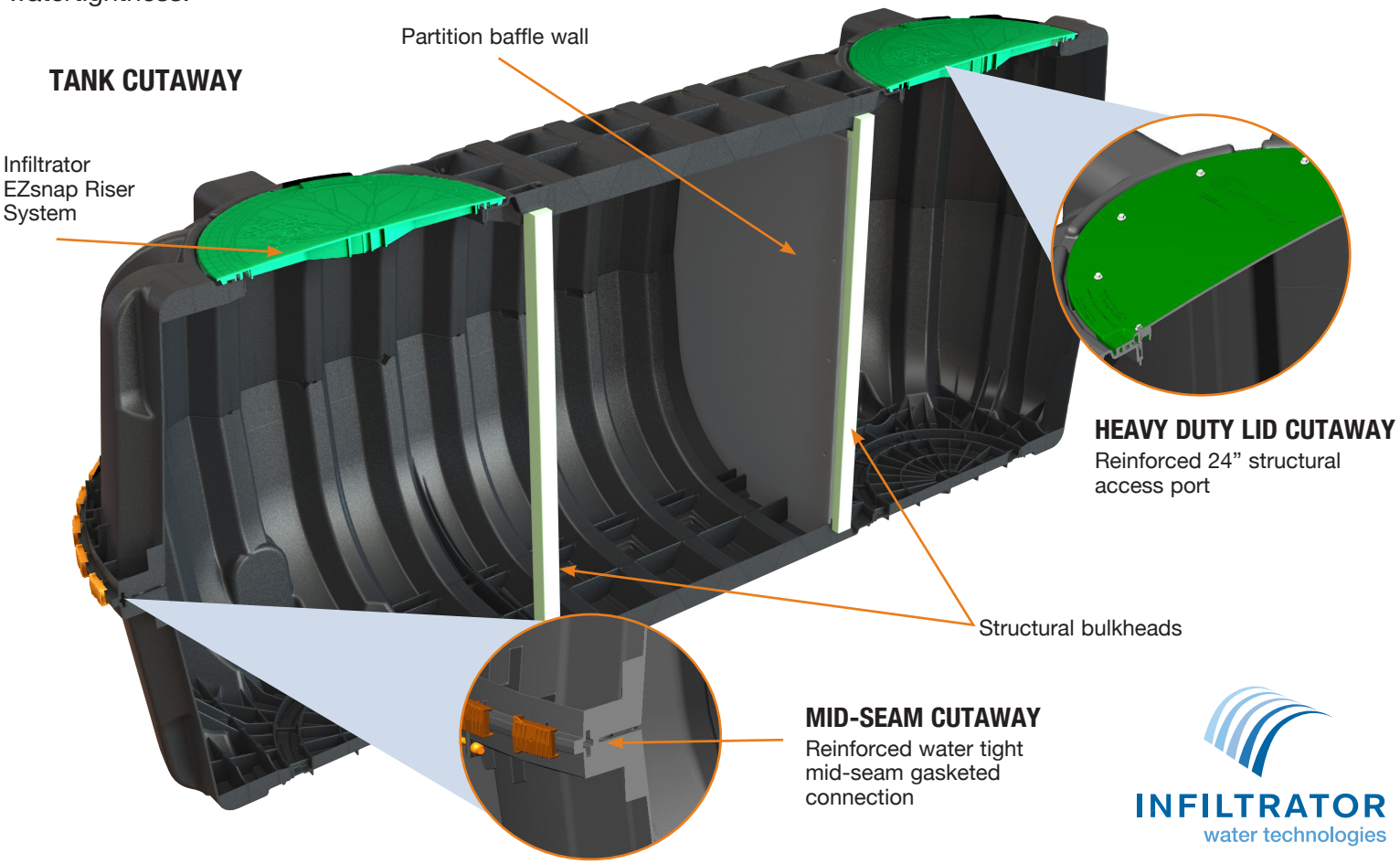

INFILTRATOR
water technologies

CM-1060 General Specifications and Illustrations

The CM-1060 is a compression molded two-piece mid-seam thermoplastic tank. The CM-1060 compression molded design allows for a mid-seam joint that has precise dimensions for accepting an engineered EPDM gasket. Infiltrator's gasket design utilizes technology from the water industry to deliver proven means of maintaining a watertight seal. The two-piece design is permanently fastened using a system of molded-in alignment dowels and locking seam clips. The CM-1060 is assembled and sold through a network of certified Infiltrator distributors.

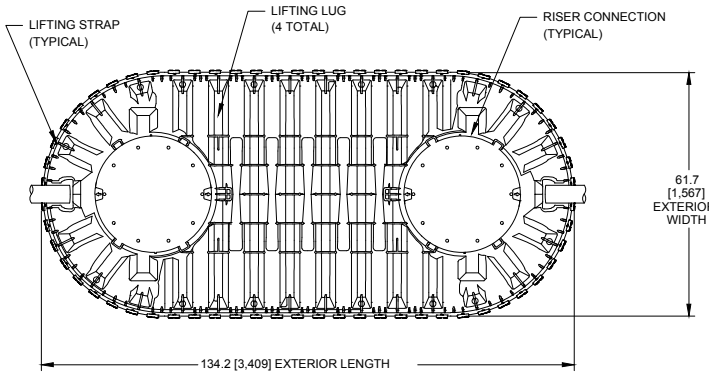

TOP VIEW

SCAN ME

Must be backfilled and installed in accordance with the Infiltrator IM- and CM-Series Septic Tank General Installation Instructions. For shallow ground water conditions reference the Infiltrator IM- and CM-Series Tank Buoyancy Control Guidance.

Please visit www.infiltratorwater.com or scan QR code for the latest information.

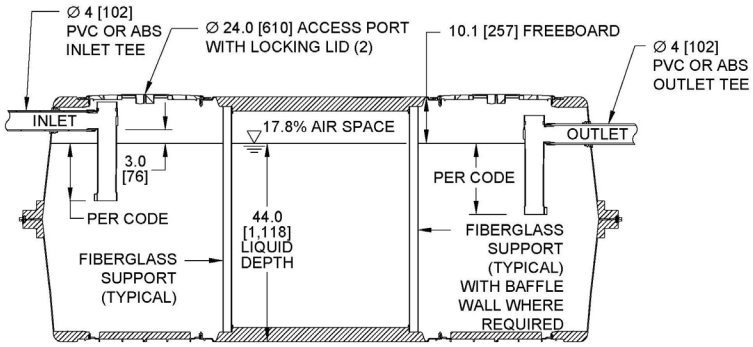

SIDE VIEW

CM-1060	
Working Capacity	1,111 gal (4,207 L)
Total Capacity	1,309 gal (4,956 L)
Airspace	17.8%
Length	134.2" (3,409 mm)
Width	61.7" (1,567 mm)
Length-to-Width Ratio	2.3 to 1
Height	54.5" (1,384 mm)
Liquid Level	44" (1,118 mm)
Invert Drop	3" (76 mm)
Fiberglass Supports	2
Compartments	1 or 2
Maximum Burial Depth	48" (1,219 mm)
Minimum Burial Depth	6" (152 mm)
Maximum Pipe Diameter	4" (102 mm)
Weight	331 lbs (151 kg)

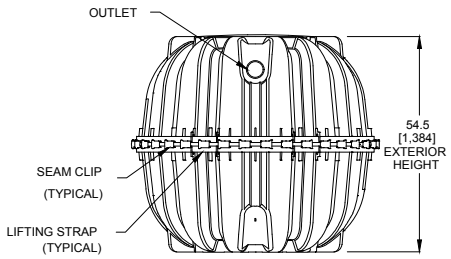

END VIEW

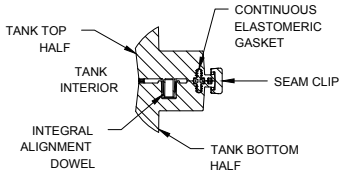

MID-HEIGHT SEAM SECTION

INFILTRATOR water technologies

4 Business Park Road
P.O. Box 768
Old Saybrook, CT 06475
860-577-7000 • Fax 860-577-7001
1-800-221-4436
www.infiltratorwater.com
info@infiltratorwater.com

U.S. Patents: 8322948; 8337119; 8297880; 7914230; 7008138. Other patents pending. Infiltrator, Quick4 and EZflow are registered trademarks of Infiltrator Water Technologies. Infiltrator Water Technologies is a wholly-owned subsidiary of Advanced Drainage Systems, Inc. (ADS).

© 2022 Infiltrator Water Technologies, LLC. Not responsible for any typographic errors. Printed in U.S.A.

CM02 0222

Contact Infiltrator Water Technologies' Technical Services Department for assistance at 1-800-221-4436

PL-68 Filter and Tee

PL-68 is much more than just an effluent filter. The housing can also be used as an inlet baffle (tee) or an outlet baffle. The housing is designed to accept Polylok's snap in gas deflector to deflect gas bubbles away from the tee and to keep the solids in the tank.

Features:

- Offers 68 linear feet of 1/16″ filter slots, which significantly extends time between cleaning.
- Accepts 3/4″ PVC handle.
- Locks in any 360° position when used with PL-68 Tee.
- PL-68 Housing can be used as an inlet or outlet tee.
- Gasket prevents bypass.

PL-68 Installation:

Ideal for residential waste flows up to 800 gallons per day (GPD). Easily installs in any new or existing 4" outlet tee.

1. Locate the outlet of the septic tank.
2. Remove the tank cover and pump tank if necessary.
3. Glue the filter housing to the outlet pipe, or use a Polylok Extend & Lok if not enough pipe exists.
4. Insert the PL-68 filter into tee.
5. Replace and secure the septic tank cover.

PL-68 Maintenance:

The PL-68 Effluent Filter will operate efficiently for several years under normal conditions before requiring cleaning. It is recommended that the filter be cleaned every time the tank is pumped, or at least every three years.

1. Do not use plumbing when filter is removed.
2. Pull PL-68 out of the tee.
3. Hose off filter over the septic tank. Make sure all solids fall back into septic tank.
4. Insert filter back into tee/housing.

Related Products:

PL-68 Filter Concrete Baffle
Extend & Lok™

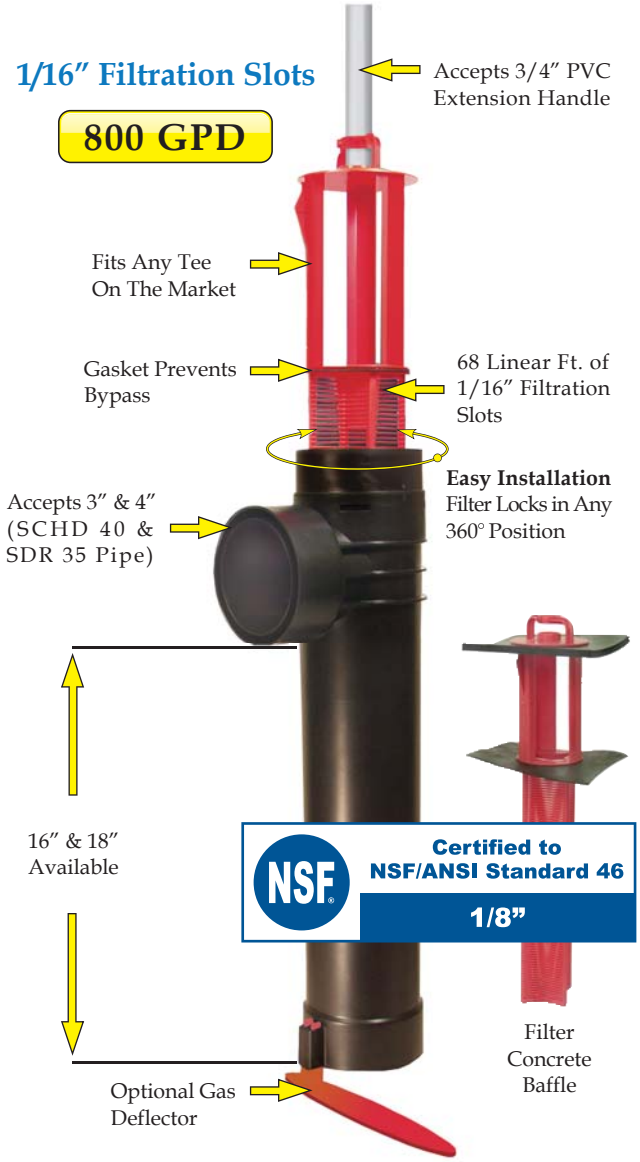

Extend & Lok™
Easily installs into existing tanks.

Spacer Bushing 4″ SCHD 40 to SDR 35

Spacer Bushing 4″ SCHD 40 to 110mm Pipe

2″ Extender

INFILTRATOR®
water technologies

Quick4™ PLUS
CHAMBER SYSTEMS

The **Quick4® Plus Standard** Chamber

Quick4 Plus™ Series

The Quick4 Plus Standard Chamber offers maximum strength through its two center structural columns. This chamber can be installed in a 36-inch-wide trench. Like the original line of Quick4 chambers, it offers advanced contouring capability with its Contour Swivel Connection™ which permits turns up to 15-degrees, right or left. It is also available in four-foot lengths to provide optimal installation flexibility. The Quick4 Plus All-in-One 12 Endcap, and the Quick4 Periscope are available with this chamber, providing increased flexibility in system configurations.

Maximum Strength

Quick4 Plus Standard Chamber Specifications

Size 34”W x 53”L x 12”H (864 mm x 1346 mm x 305 mm)
Effective Length 48” (1219 mm)
Louver Height 8” (203 mm)
Storage Capacity 47 gal (178 L)
Invert Height 0.6” (15 mm), 5.3” (135 mm), 8.0” (203 mm), 12.7” (323 mm)

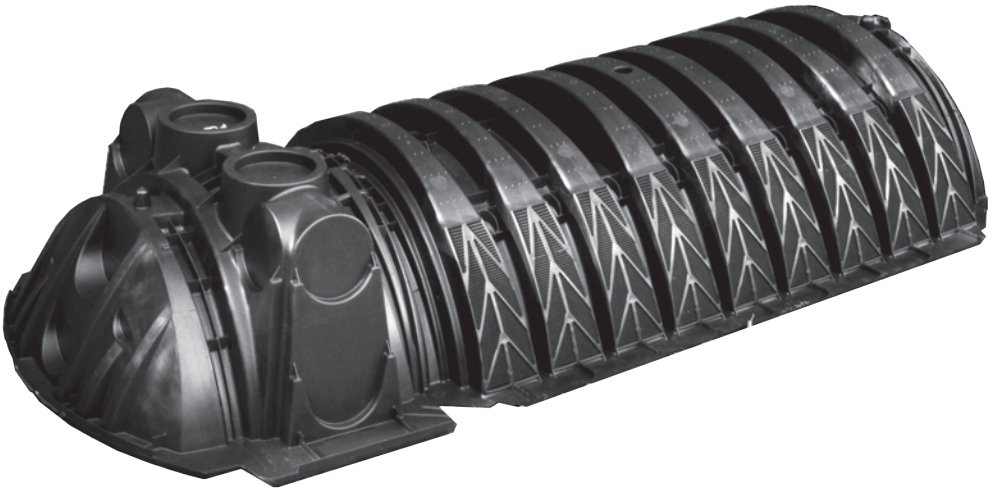

Quick4 Plus Standard Chamber Benefits:

- Two center structural columns offer increased stability and superior strength
- Advanced contouring connections
- Latching mechanism allows for quick installation
- Four-foot chamber lengths are easy to handle and install
- Supports wheel loads of 16,000 lbs/axle with 12” of cover

Quick4 Plus All-in-One 12 Endcap Benefits:

- May be used at the end of chamber row for an inlet/outlet or can be installed mid-trench
- Mid-trench connection feature allows construction of chamber rows with center feed, as an alternative to inletting at the ends of chamber rows
- Center-feed connection allows for easy installation of serial distribution systems
- Pipe connection options include sides, ends or top

Quick4 Plus All-in-One Periscope Benefits:

- Allows for raised invert installations
- 180° directional inletting
- 12” raised invert is ideal for serial applications

Certified by the International Association of Plumbing and Mechanical Officials (IAPMO)

IAPMO R&T

APPROVED in _____

Quick4 Plus Standard Chamber

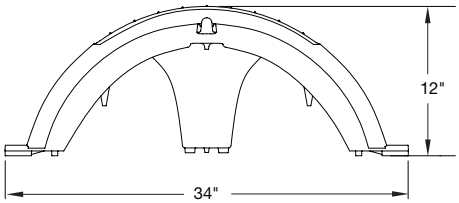

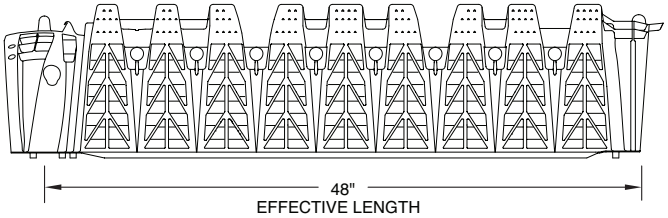

Quick4 Plus All-in-One 12 Endcap

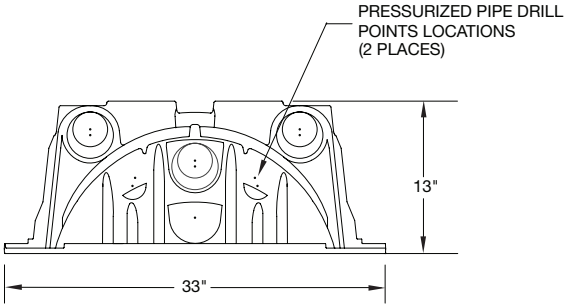

FRONT VIEW

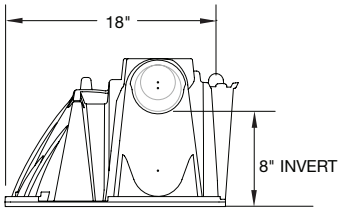

SIDE VIEW

Quick4 Plus All-in-One Periscope

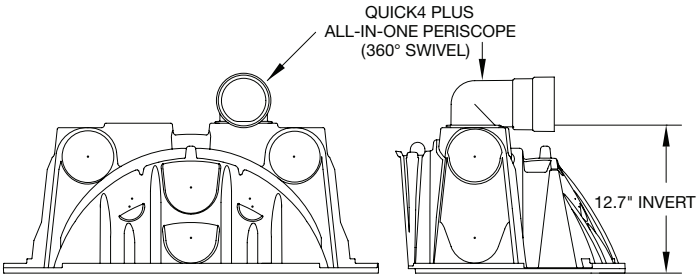

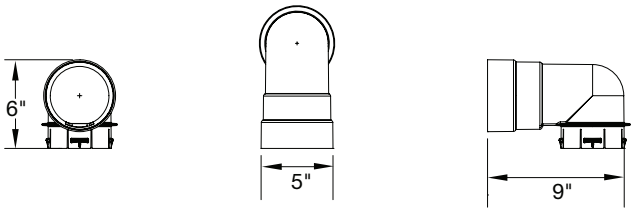

INFILTRATOR WATER TECHNOLOGIES, LLC ("INFILTRATOR")
Infiltrator Water Technologies, LLC STANDARD LIMITED Drainfield WARRANTY

(a) The structural integrity of each chamber, endcap, EZflow expanded polystyrene and/or other accessory manufactured by Infiltrator ("Units"), when installed and operated in a leachfield of an onsite septic system in accordance with Infiltrator's instructions, is warranted to the original purchaser ("Holder") against defective materials and workmanship for one year from the date that the septic permit is issued for the septic system containing the Units; provided, however, that if a septic permit is not required by applicable law, the warranty period will begin upon the date that installation of the septic system commences. To exercise its warranty rights, Holder must notify Infiltrator in writing at its Corporate Headquarters in Old Saybrook, Connecticut within fifteen (15) days of the alleged defect. Infiltrator will supply replacement Units for Units determined by Infiltrator to be covered by this Limited Warranty. Infiltrator's liability specifically excludes the cost of removal and/or installation of the Units.

(b) THE LIMITED WARRANTY AND REMEDIES IN SUBPARAGRAPH (a) ARE EXCLUSIVE. THERE ARE NO OTHER WARRANTIES WITH RESPECT TO THE UNITS, INCLUDING NO IMPLIED WARRANTIES OF MERCHANTABILITY OR FITNESS FOR A PARTICULAR PURPOSE

(c) This Limited Warranty shall be void if any part of the chamber system is manufactured by anyone other than Infiltrator. The Limited Warranty does not extend to incidental, consequential, special or indirect damages. Infiltrator shall not be liable for penalties or liquidated damages, including loss of production and profits, labor and materials, overhead costs, or other losses or expenses incurred by the Holder or any third party. Specifically excluded from Limited Warranty coverage are damage to the Units due to ordinary wear and tear, alteration, accident, misuse, abuse or neglect of the Units; the Units being subjected to vehicle traffic or other conditions which are not permitted by the installation instructions; failure to maintain the minimum ground covers set forth in the installation instructions; the placement of improper materials into the system containing the Units; failure of the Units or the septic system due to improper siting or improper sizing, excessive water usage, improper grease disposal, or improper operation; or any other event not caused by Infiltrator. This Limited Warranty shall be void if the Holder fails to comply with all of the terms set forth in this Limited Warranty. Further, in no event shall Infiltrator be responsible for any loss or damage to the Holder, the Units, or any third party resulting from installation or shipment, or from any product liability claims of Holder or any third party. For this Limited Warranty to apply, the Units must be installed in accordance with all site conditions required by state and local codes; all other applicable laws; and Infiltrator's installation instructions.

(d) No representative of Infiltrator has the authority to change or extend this Limited Warranty. No warranty applies to any party other than the original Holder. The above represents the Standard Limited Warranty offered by Infiltrator. A limited number of states and counties have different warranty requirements. Any purchaser of Units should contact Infiltrator's Corporate Headquarters in Old Saybrook, Connecticut, prior to such purchase, to obtain a copy of the applicable warranty, and should carefully read that warranty prior to the purchase of Units.

INFILTRATOR®
water technologies

4 Business Park Road
P.O. Box 768
Old Saybrook, CT 06475
860-577-7000 • Fax 860-577-7001
1-800-221-4436
www.infiltratorwater.com

U.S. Patents: 4,759,661; 5,017,041; 5,156,488; 5,336,017; 5,401,116; 5,401,459; 5,511,903; 5,716,163; 5,588,778; 5,839,844 Canadian Patents: 1,329,959; 2,004,564 Other patents pending.
Infiltrator, Equalizer, Quick4, and SideWinder are registered trademarks of Infiltrator Water Technologies. Infiltrator is a registered trademark in France. Infiltrator Water Technologies is a registered trademark in Mexico.
Contour, MicroLeaching, PolyTuff, ChamberSpacer, MultiPort, PosiLock, QuickCut, QuickPlay, SnapLock and StraightLock are trademarks of Infiltrator Water Technologies.
PolyLok is a trademark of PolyLok, Inc. TUF-TITE is a registered trademark of TUF-TITE, INC. Ultra-Rib is a trademark of IPEX Inc.
© 2016 Infiltrator Water Technologies, LLC. All rights reserved. Printed in U.S.A.

PLUS05 0816

Infiltrator Safety Star™ System

The 24” (600 mm) riser Safety Star system is a strong secondary level of protection for the EZsnap Riser System if a primary riser lid is unknowingly damaged or removed. When properly installed the Safety Star system prevents unintended entry into the tank.

(10), #14 x 2” stainless steel screws (SS1410-HEX) are provided with the EZsnap Riser System.

Safety Star Benefits:

- Compatible with 6” (150 mm) & 12” (300 mm) EZsnap Riser models
- Structural design withstands a dead load up to 300 lbs. (136 kg)
- Installs inside the EZsnap Riser stack at any desired level
- Strong polypropylene construction
- Fastened securely in place with stainless steel hardware
- Meets regulatory requirements including CSA B66:21, as a secondary safety device
- Molded in OSHA safety orange to communicate warning

Installation

The Safety Star (SNAPSAFT-2400) is designed to be mounted to the screw pilot holes at the narrow end of the EZsnap riser connection. One arm on the Safety Star folds down 15 degrees, allowing it to collapse and fit through a 24” (600 mm) opening.

Articulating arm allows for easy installation into a 24” (600 mm) opening.

1. Install the Safety Star at the EZsnap narrow riser to riser connection closest to the ground surface. A minimum of a 6” (150 mm) riser is required to accommodate the safety star and to attach the lid properly.

2. Rotate the Safety Star until the five screw slots are aligned with the screw bosses on the riser. Fasten the Safety Star in place using five (5), #14 x 2” stainless steel screws provided (SS1410-HEX).

Note: If the Safety Star is installed at the riser-to-tank connection, the five screws used to fasten the risers to the tank also secure the Safety Star. The Safety Star is designed to allow up to a 4” (100 mm) pumping hose to enter the tank while installed, allowing for ease of maintenance without removal.

3. Five screws shall be secured tightly into place following a star pattern to complete the Safety Star installation. If the Safety Star requires removal, 5 riser-to-tank screw locations will remain fastened at all times.

4. The Infiltrator Tank Lid is then installed using all ten stainless steel screws to complete the riser installation.

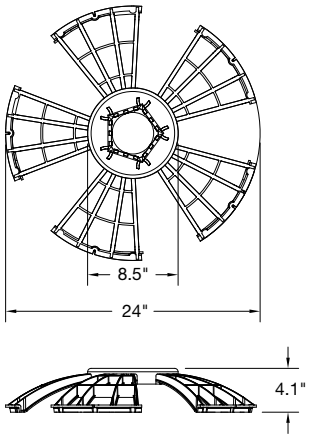

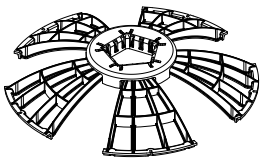

SCAN ME

For U.S. Patents information visit www.infiltratorwater.com/patents. Other patents pending. Infiltrator, Quick4 and EZflow are registered trademarks of Infiltrator Water Technologies. Infiltrator Water Technologies is a wholly-owned subsidiary of Advanced Drainage Systems, Inc. (ADS).

© 2024 Infiltrator Water Technologies, LLC. Not responsible for any typographic errors. Printed in U.S.A.

Contact Infiltrator Water Technologies’ Technical Services Department for assistance at 1-800-221-4436

LAND RESOURCE MANAGEMENT
Land Evaluation by Land Experts
P.O. BOX 9251 , ASHEVILLE, NC 28815 || 828-900-8700 || WWW.LANDRM.COM

PROJECT NO. AND NAME: Bush / Secluded Hills

BORING: 1 | LOT: 13 | COUNTY: Buncombe | DATE: 12/10/25

PERCENT SLOPE (Rule .0502(a)(b)): 25%

CLAY MINERALOGY (Rule .0503(3)): N/A SE MX EX

LANDSCAPE POSITION (Rule .0502(c)): SS

SOIL DEPTH (Rule .0505): 43"

TOPOGRAPHY (Rule .0502(c)(3)): Uniform

RESTRICTIVE HORIZON (Rule .0507): 43" RLWB

PARENT MATERIAL: AL CO RE A/C A/R C/R

SEASONAL HIGH-WATER TABLE (Rule .0504): >43"

SOIL GROUP (Rule .0503(1)): 3

TYPE OF WATER TABLE (Rule .0504): NA

SAPROLITE GROUP (Rule .0506(b)(2)(A)): NA

CLASSIFICATION (Rule .0509): S US

NOTES:

18 inches = trench depth
9 inches = slope correction soil depth
12 inches = regulated soil depth
+ ___ inches = regulated saprolite depth
39 inches total depth needed

Calculated for: 25% Reduction

HORIZON (Rule .0501)	DEPTH (inches) (Rule .0501)	Moist Color (Rule .0501) MATRIX	MOTTLES	TEXTURE (Rule .0503(1))	STRUCT-URE (Rule .0503(2))	CONSIST-ENCE (Rule .0503(3))	CLAY (%)	LTAR AEROBIC DRIP (Rule .0908)	LTAR CONV. (Rule .0901)
A	0-4	10YR 4/4	—	L	Gr	VFR	—	.4	.6
BT	4-28	7.5YR 5/8	—	CL	B	FR	35	.3	.4
BC1	28-36	↓	MCS	SCL	B	FR	30	.35	.45
BC2	36-43	↓	MCS	SCL	B	FR	25	.35	.45
Cr	43	RLWB							

LRM- NC 18E Revised 01/2024

MCA = Multicolored Alluvium
MCC = Multicolored colluvium
MCS = Multicolored saprolite

LTAR = Long Term Acceptance Rate in gallons per square foot per day
RF = Rock fragments

RLHB = Restrictive layer – Hard bedrock
RLWB = Restrictive layer – Weathered bedrock
SBRF = Stopped by rock fragments

DESCRIBED BY: ANW

CHECKED BY: WBF

LAND RESOURCE MANAGEMENT

Land Evaluation by Land Experts

P.O. BOX 9251 , ASHEVILLE, NC 28815 || 828-900-8700 || WWW.LANDRM.COM

PROJECT NO. AND NAME: Bush / Secluded Hills

BORING: 2 | LOT: 13 | COUNTY: Buncombe | DATE: 12/10/25

PERCENT SLOPE (Rule .0502(a)(b)): 23%

CLAY MINERALOGY (Rule .0503(3)): N/A (SE) MX EX

LANDSCAPE POSITION (Rule .0502(c)): SS

SOIL DEPTH (Rule .0505): 45"

TOPOGRAPHY (Rule .0502(c)(3)): Uniform

RESTRICTIVE HORIZON (Rule .0507): 45" RLWB

PARENT MATERIAL: AL CO (RE) A/C A/R C/R

SEASONAL HIGH-WATER TABLE (Rule .0504): >45"

SOIL GROUP (Rule .0503(1)): 3

TYPE OF WATER TABLE (Rule .0504): NA

SAPROLITE GROUP (Rule .0506(b)(2)(A)): NA

CLASSIFICATION (Rule .0509): (S) US

NOTES:

18 inches = trench depth
9 inches = slope correction soil depth
12 inches = regulated soil depth
\+ ___ inches = regulated saprolite depth
39 inches total depth needed

Calculated for: 25% Reduction

HORIZON (Rule .0501)	DEPTH (inches) (Rule .0501)	Moist Color (Rule .0501) MATRIX	MOTTLES	FIELD ESTIMATES TEXTURE (Rule .0503(1))	STRUCT-URE (Rule .0503(2))	CONSIST-ENCE (Rule .0503(3))	CLAY (%)	LTAR AEROBIC DRIP (Rule .0908)	LTAR CONV. (Rule .0901)
A	0-4	10YR 4/4	—	L	GR	VFR	—	.4	.6
BT_1	4-22	10YR 5/6	—	SCL	B	FR	30	.35	.45
BT_2	22-38	7.5YR 5/6	—	CL	B	FR	35	.3	.4
Bc	38-45	5YR 5/4	MCS	SCL	B	FR	25	.35	.5
Cr	45	RLWB							

LRM- NC 18E Revised 01/2024

MCA = Multicolored Alluvium
MCC = Multicolored colluvium
MCS = Multicolored saprolite

LTAR = Long Term Acceptance Rate in gallons per square foot per day
RF = Rock fragments

RLHB = Restrictive layer – Hard bedrock
RLWB = Restrictive layer – Weathered bedrock
SBRF = Stopped by rock fragments

DESCRIBED BY: EM

CHECKED BY: WBF

LAND RESOURCE MANAGEMENT
Land Evaluation by Land Experts
P.O. BOX 9251 , ASHEVILLE, NC 28815 || 828-900-8700 || WWW.LANDRM.COM

PROJECT NO. AND NAME: Bush / Secluded Hills

BORING: 3 | LOT: 13 | COUNTY: Buncombe | DATE: 12/10/25

PERCENT SLOPE (Rule .0502(a)(b)): 25% | CLAY MINERALOGY (Rule .0503(3)): N/A SE MX EX

LANDSCAPE POSITION (Rule .0502(c)): SS | SOIL DEPTH (Rule .0505): 39"

TOPOGRAPHY (Rule .0502(c)(3)): Uniform | RESTRICTIVE HORIZON (Rule .0507): 39" RLWB

PARENT MATERIAL: AL CO RE A/C A/R C/R | SEASONAL HIGH-WATER TABLE (Rule .0504): >39"

SOIL GROUP (Rule .0503(1)): 3 | TYPE OF WATER TABLE (Rule .0504): NA

SAPROLITE GROUP (Rule .0506(b)(2)(A)): NA | CLASSIFICATION (Rule .0509): S US

NOTES:

18 inches = trench depth
9 inches = slope correction soil depth
12 inches = regulated soil depth
+ ___ inches = regulated saprolite depth
39 inches total depth needed

Calculated for: 25% Reduction

HORIZON (Rule .0501)	DEPTH (inches) (Rule .0501)	Moist Color (Rule .0501) MATRIX	MOTTLES	TEXTURE (Rule .0503(1))	STRUCT-URE (Rule .0503(2))	CONSIST-ENCE (Rule .0503(3))	CLAY (%)	LTAR AEROBIC DRIP (Rule .0908)	LTAR CONV. (Rule .0901)
A	0-4	10YR 4/4	—	L	GR	VFR	—	.4	.6
BT	4-30	7.5YR 5/6	—	SCL	B	FR	30	.35	.45
BC	30-39	↓	MCS	SCL	B	FR	25	.35	.5
Cr	39	RLWB	—						

LRM- NC 18E Revised 01/2024

MCA = Multicolored Alluvium
MCC = Multicolored colluvium
MCS = Multicolored saprolite

LTAR = Long Term Acceptance Rate in gallons per square foot per day
RF = Rock fragments

RLHB = Restrictive layer – Hard bedrock
RLWB = Restrictive layer – Weathered bedrock
SBRF = Stopped by rock fragments

DESCRIBED BY: EM

CHECKED BY: WBF

LAND RESOURCE MANAGEMENT
Land Evaluation by Land Experts
P.O. BOX 9251 , ASHEVILLE, NC 28815 || 828-900-8700 || WWW.LANDRM.COM

PROJECT NO. AND NAME: Bush / Secluded Hills

BORING: 4 | LOT: 13 | COUNTY: Buncombe | DATE: 12/10/25

PERCENT SLOPE (Rule .0502(a)(b)): 25%

CLAY MINERALOGY (Rule .0503(3)): N/A (SE) MX EX

LANDSCAPE POSITION (Rule .0502(c)): SS

SOIL DEPTH (Rule .0505): 40"

TOPOGRAPHY (Rule .0502(c)(3)): (Uniform)

RESTRICTIVE HORIZON (Rule .0507): 40" RLWB

PARENT MATERIAL: AL CO (RE) A/C A/R C/R

SEASONAL HIGH-WATER TABLE (Rule .0504): >40"

SOIL GROUP (Rule .0503(1)): 3

TYPE OF WATER TABLE (Rule .0504): NA

SAPROLITE GROUP (Rule .0506(b)(2)(A)): NA

CLASSIFICATION (Rule .0509): (S) US

NOTES: Small pocket of WR, not believed to be restrictive until 40".

18 inches = trench depth
9 inches = slope correction soil depth
12 inches = regulated soil depth
+ ___ inches = regulated saprolite depth
39 inches total depth needed

Calculated for: 25% Reduction

HORIZON (Rule .0501)	DEPTH (inches) (Rule .0501)	Moist Color (Rule .0501) MATRIX	MOTTLES	TEXTURE (Rule .0503(1))	STRUCT-URE (Rule .0503(2))	CONSIST-ENCE (Rule .0503(3))	CLAY (%)	LTAR AEROBIC DRIP (Rule .0908)	LTAR CONV. (Rule .0901)
A	0-4	10YR 4/4	—	L	GR	VFR	—	.4	.6
BT	4-27	7.5YR 5/8	—	SCL	B	FR	30	.35	.45
Bc	27-40	↓	MCS	SCL	B	FR	25	.35	.5
Cr	40	RLWB	—						

LRM- NC 18E Revised 01/2024

MCA = Multicolored Alluvium
MCC = Multicolored colluvium
MCS = Multicolored saprolite

LTAR = Long Term Acceptance Rate in gallons per square foot per day
RF = Rock fragments

RLHB = Restrictive layer – Hard bedrock
RLWB = Restrictive layer – Weathered bedrock
SBRF = Stopped by rock fragments

DESCRIBED BY: EM

CHECKED BY: WBF

LAND RESOURCE MANAGEMENT
Land Evaluation by Land Experts
P.O. BOX 9251 , ASHEVILLE, NC 28815 || 828-900-8700 || WWW.LANDRM.COM

PROJECT NO. AND NAME: Bush / Secluded Hills

BORING: 5 LOT: 13	COUNTY: Buncombe DATE: 12/10/25
PERCENT SLOPE (Rule .0502(a)(b)): 22%	CLAY MINERALOGY (Rule .0503(3)): N/A SE MX EX
LANDSCAPE POSITION (Rule .0502(c)): SS	SOIL DEPTH (Rule .0505): 35"
TOPOGRAPHY (Rule .0502(c)(3)): Uniform	RESTRICTIVE HORIZON (Rule .0507): 35" RLWB
PARENT MATERIAL: AL CO RE A/C A/R C/R	SEASONAL HIGH-WATER TABLE (Rule .0504): > 35"
SOIL GROUP (Rule .0503(1)): 3	TYPE OF WATER TABLE (Rule .0504): NA
SAPROLITE GROUP (Rule .0506(b)(2)(A)): NA	CLASSIFICATION (Rule .0509): S US
NOTES:	

12 inches = trench depth
8 inches = slope correction soil depth
12 inches = regulated soil depth
+ ___ inches = regulated saprolite depth
32 inches total depth needed

Calculated for: Shallow-placed 25% Reduction

HORIZON (Rule .0501)	DEPTH (inches) (Rule .0501)	Moist Color (Rule .0501) MATRIX	MOTTLES	TEXTURE (Rule .0503(1))	STRUCT-URE (Rule .0503(2))	CONSIST-ENCE (Rule .0503(3))	CLAY (%)	LTAR AEROBIC DRIP (Rule .0908)	LTAR CONV. (Rule .0901)
A	0-4	10YR 4/4	—	L	GR	VFR	—	.4	.6
BT	4-30	7.5YR 5/6	—	CL	B	FR	35	.3	.8
Bc	30-35		MCS	SCL	B	FR	30	.35	.45
Cr	35	RLWB							

LRM- NC 18E Revised 01/2024

MCA = Multicolored Alluvium
MCC = Multicolored colluvium
MCS = Multicolored saprolite

LTAR = Long Term Acceptance Rate in gallons per square foot per day
RF = Rock fragments

RLHB = Restrictive layer – Hard bedrock
RLWB = Restrictive layer – Weathered bedrock
SBRF = Stopped by rock fragments

DESCRIBED BY: EM

CHECKED BY: WBF